BeneFusion eDS

BeneFusion eDS ex

Infusion Supervision System

Operator’s Manual

CE 2797

© Copyright 2024-2026 Shenzhen Mindray Scientific Co., Ltd. All rights reserved.

Release date: April 2026

Revision: 6.0

Intellectual Property Statement

SHENZHEN MINDRAY SCIENTIFIC CO., LTD. (hereinafter called Mindray Scientific) owns the intellectual property rights to this product and this manual. This manual may refer to information protected by copyrights or patents and does not convey any license under the patent rights of Mindray Scientific, nor the rights of others.

Mindray Scientific intends to maintain the contents of this manual as confidential information. Disclosure of the information in this manual in any manner whatsoever without the written permission of Mindray Scientific is strictly forbidden.

Release, amendment, reproduction, distribution, rental, adaptation, translation of this manual in any manner whatsoever without the written permission of Mindray Scientific is strictly forbidden.

mindray, MINDRAY, MINDRAY, and BeneFusion are the registered trademarks or trademarks owned by Mindray in China and other countries. Mindray Scientific is authorized by Mindray to use above registered trademarks or trademarks.

Responsibility on the Manufacturer Party

Contents of this manual are subject to changes without prior notice.

All information contained in this manual is believed to be correct. Mindray Scientific shall not be liable for errors contained herein nor for incidental or consequential damages in connection with the furnishing, performance, or use of this manual.

Mindray Scientific is responsible for the effects on safety, reliability and performance of this product, only if:

- all installation operations, expansions, changes, modifications and repairs of this product are conducted by Mindray Scientific authorized personnel;
- the electrical installation of the relevant room complies with the applicable national and local requirements;
- the product is used in accordance with the instructions for use.

Warranty

THIS WARRANTY IS EXCLUSIVE AND IS IN LIEU OF ALL OTHER WARRANTIES, EXPRESSED OR IMPLIED, INCLUDING WARRANTIES OF MERCHANTABILITY OR FITNESS FOR ANY PARTICULAR PURPOSE.

Exemptions

Mindray Scientific's obligation or liability under this warranty does not include any transportation or other charges or liability for direct, indirect or consequential damages or delay resulting from the improper use or application of the product or the use of parts or accessories not approved by Mindray Scientific or repairs by people other than Mindray Scientific authorized personnel.

This warranty shall not extend to

- Malfunction or damage caused by improper use or man-made failure.
- Malfunction or damage caused by unstable or out-of-range power input.
- Malfunction or damage caused by force majeure such as fire and earthquake.
- Malfunction or damage caused by improper operation or repair by unqualified or unauthorized service people.
- Malfunction of the instrument or part whose serial number is not legible enough.
- Others not caused by instrument or part itself.

Company Contact

Manufacturer:	Shenzhen Mindray Scientific Co., Ltd.
Address:	6/F, Bldg 2, 1203 Nanhuan Avenue, Yutang Block, Guangming District, 518106 Shenzhen, P.R.China
Website:	www.mindray.com
E-mail Address:	service@mindray.com
Tel:	+86 755 81888998
Fax:	+86 755 26582680

EC REP

EC-Representative:	Shanghai International Holding Corp. GmbH (Europe)
Address:	Eiffestraβe 80, 20537 Hamburg, Germany
Tel:	0049-40-2513175
Fax:	0049-40-255726

Notification of Adverse Events

As a health care provider, you may report the occurrence of certain events to SHENZHEN MINDRAY SCIENTIFIC CO., LTD., and possibly to the competent authority of the Member state in which the user and / or patient is established.

These events, include device-related death and serious injury or illness. In addition, as part of our Quality Assurance Program, SHENZHEN MINDRAY SCIENTIFIC CO., LTD. requests to be notified of device failures or malfunctions. This information is required to ensure that SHENZHEN MINDRAY SCIENTIFIC CO., LTD. provides only the highest quality products.

Preface

Manual Purpose

This manual contains the instructions necessary to operate the product safely and in accordance with its function and intended use. Observance of this manual is a prerequisite for proper product performance and correct operation and ensures patient and operator safety.

This manual is based on the maximum configuration and therefore some contents may not apply to your product. If you have any question, please contact us.

This manual is an integral part of the product. It should always be kept close to the equipment so that it can be obtained conveniently when needed.

Intended Audience

This manual is geared for clinical professionals who are expected to have a working knowledge of medical procedures, practices and terminology as required for monitoring of critically ill patients.

Illustrations

All illustrations in this manual serve as examples only. They may not necessarily reflect the setup or data displayed on your equipment.

Conventions

- ***Italic text*** is used in this manual to quote the referenced chapters or sections.
- ***Bold text*** is used to indicate the screen texts.
- → is used to indicate operational procedures.

Contents

1 Safety ..... 1 - 1

1.1 Safety Information ..... 1 - 1

1.1.1 Warnings ..... 1 - 1
1.1.2 Cautions ..... 1 - 2
1.1.3 Notes ..... 1 - 3

1.2 Equipment Symbols ..... 1 - 3

2 Equipment Introduction ..... 2 - 1

2.1 Intended Use ..... 2 - 1

2.1.1 Intended Purpose Statement ..... 2 - 1
2.1.2 Indication for Use ..... 2 - 1
2.1.3 Intended Users ..... 2 - 1
2.1.4 Intended Patient Population ..... 2 - 1
2.1.5 Intended Medical Conditions ..... 2 - 2
2.1.6 Contra-indications ..... 2 - 2
2.1.7 Side-effects ..... 2 - 2

2.2 Clinical Benefit ..... 2 - 2

2.3 Applied Part ..... 2 - 2

2.4 System Components ..... 2 - 2

2.5 Dock ..... 2 - 3

2.5.1 Front View ..... 2 - 3
2.5.2 Left View ..... 2 - 4
2.5.3 Rear View ..... 2 - 4
2.5.4 Using the Pump Touchscreen ..... 2 - 5
2.5.5 Using the Pump On-Screen Keyboard ..... 2 - 6

3 Equipment Preparation ..... 3 - 1

3.1 Equipment Preparation Safety Information ..... 3 - 1

3.2 Environmental Requirements ..... 3 - 2

3.3 Installation ..... 3 - 2

3.3.1 Securing a Pump in the Dock ..... 3 - 3
3.3.2 Securing a Dock in the Medical Supply Unit ..... 3 - 4
3.3.3 Securing a Dock in the Medical Trolley ..... 3 - 4

3.4 Setting Up the Equipment ..... 3 - 4

3.4.1 Connecting the AC Mains ..... 3 - 5

3.5 Setting Up the Dock ..... 3 - 5

3.6 Turning on the Dock ..... 3 - 6

3.7 Turning off the Dock ..... 3 - 6

4 Dock Setup ..... 4 - 1

4.1 Accessing the Dock Setup Menu ..... 4 - 1

4.2 The Network Setup Settings ..... 4 - 1
4.2.1 The Network Type Settings ..... 4 - 1
4.2.2 The LAN IP Settings ..... 4 - 2
4.2.3 The WLAN Settings ..... 4 - 2
4.2.4 The Bedside Hotspot Settings ..... 4 - 3
4.2.5 The WLAN IP Settings ..... 4 - 3
4.2.6 The Central Station Setup Settings ..... 4 - 4
4.2.7 The Device Discover Settings ..... 4 - 4
4.2.8 The ADT Setup Settings ..... 4 - 4
4.2.9 The Cert Manage Settings ..... 4 - 5
4.2.10 The HL7 Configuration Settings ..... 4 - 5
4.3 The Remote Control Settings ..... 4 - 6
4.4 The Device Management Settings ..... 4 - 6
4.5 The Patient Information Settings ..... 4 - 6
4.6 Viewing the History Record ..... 4 - 7
4.7 The Language Settings ..... 4 - 7
4.8 The Alarm Settings ..... 4 - 7
4.9 Viewing the Version Information ..... 4 - 7
4.10 The Batch Configuration Settings ..... 4 - 8
4.10.1 Configuring Pumps through Batch Assign ..... 4 - 8
4.10.2 Configuring Pumps through the CMS ..... 4 - 8
4.11 Managing Dock Certifications ..... 4 - 8

5 Alarms ..... 5 - 1

6 Networked Communication (Optional) ..... 6 - 1
6.1 Network Safety Information ..... 6 - 1
6.2 Connecting the Equipment to the nCS / CMS ..... 6 - 2
6.3 Connecting the Equipment to the eGateway ..... 6 - 2

7 Maintenance ..... 7 - 1
7.1 Maintenance Safety Information ..... 7 - 1
7.2 Maintenance and Testing Schedule ..... 7 - 2
7.3 Testing Methods and Procedures ..... 7 - 2
7.3.1 Performing Visual Inspection ..... 7 - 2
7.3.2 Performing Power-on Test ..... 7 - 2
7.4 Disposing of the Equipment ..... 7 - 3

8 Care and Cleaning ..... 8 - 1
8.1 Care and Cleaning Safety Information ..... 8 - 1
8.2 Cleaning the Dock and Infusion Supervision Base ..... 8 - 2
8.3 Disinfecting the Dock and Infusion Supervision Base ..... 8 - 2
8.4 Cleaning the Pole Clamp and Medical Trolley ..... 8 - 5

8.5 Disinfecting the Pole Clamp and Medical Trolley ..... 8 - 5
8.6 Sterilization ..... 8 - 6
8.7 Impact of Improper Cleaning ..... 8 - 6

9 Accessories ..... 9 - 1

A Product Specifications ..... A - 1
A.1 Classifications ..... A - 1
A.2 Environmental Specifications ..... A - 1
A.3 Power Supply Specifications ..... A - 2
A.3.1 External Power Supply Specifications ..... A - 2
A.4 Physical Specifications ..... A - 2
A.5 Hardware Specifications ..... A - 2
A.5.1 LEDs ..... A - 2
A.5.2 Interface Specifications ..... A - 2
A.6 Wireless Network ..... A - 3
A.7 Operating Environment ..... A - 3

B EMC and Radio Regulatory Compliance ..... B - 1
B.1 EMC ..... B - 1
B.2 Radio Regulatory Compliance ..... B - 9

C Abbreviations ..... C - 1

D Declaration of Conformity ..... D - 1

This page intentionally left blank.

1 Safety

1.1 Safety Information

WARNING

- **Indicates a potential hazard or unsafe practice that, if not avoided, could result in death, serious injury or damage to product/property.**

CAUTION

- **Indicates a potential hazard or unsafe practice that, if not avoided, could result in minor personal injury, product malfunction or damage to product/ property.**

NOTE

- **Provides application tips or other useful information to ensure that you get the most out of the product.**

1.1.1 Warnings

WARNING

- **Ensure that this device is used in accordance with the requirements, procedures, warnings, and precautions outlined in this manual.**
- **To avoid risk of electric shock, the equipment must only be connected to mains power with protective earth. If a protective earth conductor is not provided, do not use the mains power, if possible.**
- **To avoid explosion hazard, do not use the equipment in the presence of oxygen-rich atmospheres, flammable anesthetics, or other flammable agents.**
- **The equipment is not intended to be used within the Magnetic Resonance (MR) environment.**
- **Do not use the multiple portable socket outlets (MPSO) or AC mains extension cords. Ensure that the sum of the individual ground leakage currents does not exceed the allowable limits.**

- **Do not open the equipment housings. All servicing and future upgrades must be carried out by trained and authorized personnel. Moreover, the servicing must be done only after the AC power supply is disconnected.**
- **Do not place the equipment or accessories in any position that might cause it to fall on the patient.**
- **Do not start an infusion unless the setup was verified to be correct.**
- **To avoid inadvertent disconnection, route all cables in a way to prevent a stumbling hazard. Wrap and secure excess cabling to reduce risk of entanglement by patients or personnel.**
- **Do not touch the patient and device connectors simultaneously. Otherwise leakage current may result in patient injury.**
- **Ensure that more than two people are present to support and operate the equipment when it is transferred within the hospital, so as to prevent damage to the equipment and avoid tipping which can cause injury.**
- **The communication distance between the Dock and BeneFusion nCS Infusion Supervision System, the Dock and BeneVision Central Monitoring System should be less than 50 m.**
- **Support cascade for up to four shelf modules, and ensure that each shelf module is reliably fixed.**
- **Equipments connected to the Dock must meet the requirements of IEC 60950. Only equipments designated by the manufacturer can be connected to the Dock. Based on patient safety, do not insert products that are not specified by the manufacturer into the Dock and its connectors.**
- **Keep a distance of at least 30 cm away from the devices with higher interference signals, such as HF instruments, their accessories and cables, and other electrosurgical instruments, mobile phones and other microwave equipments.**
- **To avoid electric shock, do not touch patient and other non-defibrillation proof equipments during defibrillation. Defibrillation will not affect the performance of the equipment.**

1.1.2 Cautions

CAUTION

- **Ensure that the equipment is supplied with continuous electric power during work. Sudden power failure may cause data loss.**
- **Electromagnetic fields may affect equipment performance. This makes it necessary for other equipment used in the vicinity of this equipment to meet EMC standards. Mobile phones, X ray and MRI equipment are all potential interference sources because of their high-intensity electromagnetic radiation.**

- **Always install or carry the equipment properly to avoid damage caused by drop, impact, strong vibration or other mechanical force. The equipment should be observed to verify normal operation after fall, otherwise it cannot be used.**
- **Dry the equipment immediately in case of rain or water spray.**
- **Some settings are password protected and can only be changed by authorized personnel. Contact your department manager or biomedical engineering department for the passwords used at your facility.**

1.1.3 Notes

NOTE

- **If this device fail to function as prescribed in this manual (e.g. loose, damaged or broken components), stop using the device immediately and report the incidents of the malfunction (serial number (SN) of the pump and Dock, etc.) to the distributor or service personnel.**
- **The software was developed in compliance with IEC62304.**
- **The equipment provides power-down storage. Alarms limit setting and history record are saved and will be maintained if the equipment is powered down suddenly. The storage time is equals to the equipment's service life. The alarm limit settings before power-down are reloaded when the equipment is restarted.**
- **This manual describes all features and options. Your equipment may not have all of them.**

1.2 Equipment Symbols

Some symbols may not appear on your equipment.

	Refer to instruction manual/ booklet		Caution
	Alternating current		Input/output
	Date of manufacture		Manufacturer

IP33	Protected against solid foreign objects with a diameter no less than 2.5 mm in diameter. Protected against spraying liquid water.		DEFIBRILLATION-PROOF TYPE CF APPLIED PART
	Atmospheric pressure limitations		Humidity limitations
	THIS WAY UP		Keep dry
	Fragile, handle with care		STACKING LIMIT BY NUMBER
	Dispose of in accordance to your country's requirements	EC REP	Authorized representative in the European Community
	Locking		Unlocking
	Temperature limitations		No pushing
UDI	Unique Device Identifier	SN	Serial number
MD	Medical Device		
CE 2797	The product bears CE mark indicating its conformity with the provisions of the REGULATION (EU) 2017/745 on medical devices and fulfills the general safety and performance requirements of Annex I of this regulation. Note: The product complies with the Council Directive 2011/65/EU.		

The general meaning assigned to geometric shapes, safety colors and contrast colors for safety signs are as follows:

Geometric shape	Meaning	Safety color	Contrast color	Graphical symbol color
	Mandatory action	Blue	White	White
	Warning	Yellow	Black	Black

This page intentionally left blank.

2 Equipment Introduction

2.1 Intended Use

2.1.1 Intended Purpose Statement

The Infusion Supervision System intended for conjunction with the infusion pump and syringe pump, providing space management, power management, alarm management, information display, and communicate with pump to transmit data.

WARNING

- **This system is intended for use only by clinical professionals or under their guidance. It must only be used by persons who have received adequate training in its use. Anyone unauthorized or untrained must not perform any operation on it.**

NOTE

- **According to the conclusion of clinical evaluation and residual risk evaluation, for the intended patients, there is no known side effects that can occur during or after the use of the medical device. And there is no need for the operator to make extra preparations. Thus, no residual risk associated with using the medical device should be disclosed.**

2.1.2 Indication for Use

The Infusion Supervision System is in conjunction with the infusion pump and syringe pump, providing space management, power management, alarm management, information display, and communicate with pump to transmit data.

2.1.3 Intended Users

The Infusion Supervision System is intended to be used by trained healthcare professionals.

2.1.4 Intended Patient Population

The Infusion Supervision System is intended for adults, pediatric and neonate.

2.1.5 Intended Medical Conditions

The Infusion Supervision System is expected to be used in institutes or units with healthcare capabilities, such as operating rooms, emergency departments, wards, ICU.

2.1.6 Contra-indications

None.

2.1.7 Side-effects

None.

2.2 Clinical Benefit

The clinical benefit of the infusion supervision system could be concluded as centralized data transmission which can better present the infusion information of patients and facilitate the treatment of patients. This is indirect benefit for patient. For centralized data transmission, the infusion information supervision system will integrate multiple single pumps to centrally manage the information transmission and information display of the single pump, reduce the misuse caused by the simultaneous use of multiple single pumps. The centralized data transmission management provide convenience for medical staff, and bring indirect benefits for patients' infusion treatment.

2.3 Applied Part

The applied part of the equipment is the part of the line that comes into physical contact with the patient.

2.4 System Components

The Infusion Supervision System consists of the controller and shelf module.

2.5 Dock

2.5.1 Front View

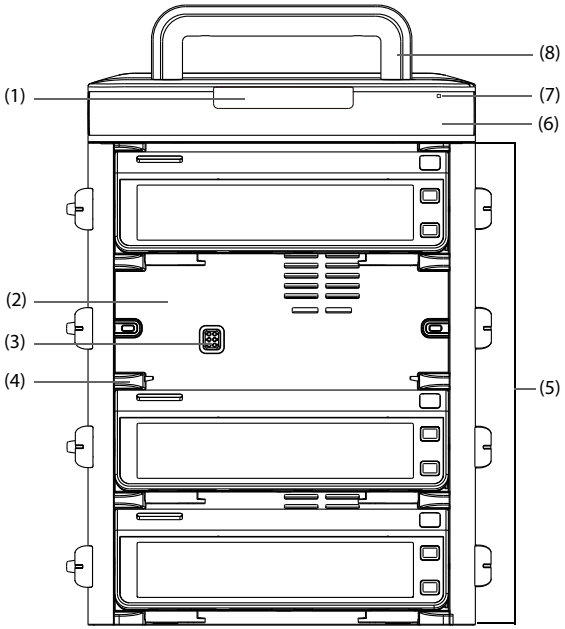

(1) Alarm light
When an alarm occurs, this lamp lights and flashes corresponding with the alarm priority:
- High priority alarms: the lamp quickly flashes red.
- Low priority alarms: the lamp lights in yellow without flashing.

(2) Pump bay
Houses the pump.

(3) Multifunctional connector
Provides power and data communication to individual pumps when pumps are secured in the Dock.

(4) Connection rail lock
Secures the pump in place.

(5) Shelf module
Holds the pump.

(6) Controller

(7) External power LED
- On: when external power supply is connected.
- Off: when external power supply is not connected.

(8) Controller handle
Lifts the shelf module. To prevent handle breakage, the controller handle can be used to carry only one shelf module containing maximum four pumps.

2.5.2 Left View

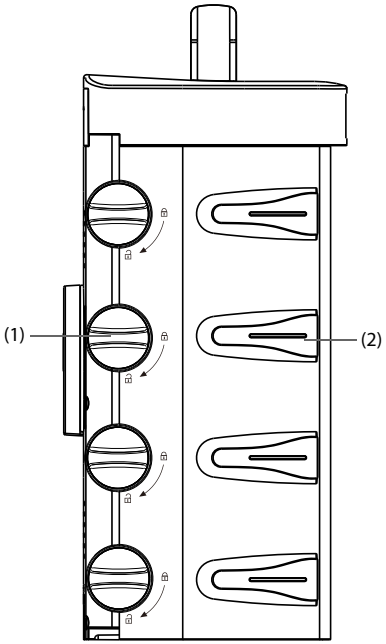

(1) Unlocking knob
Turns the unlocking knob clockwise to the vertical position to remove the pump.

(2) Infusion tubing guide
Secures the IV tubing.

2.5.3 Rear View

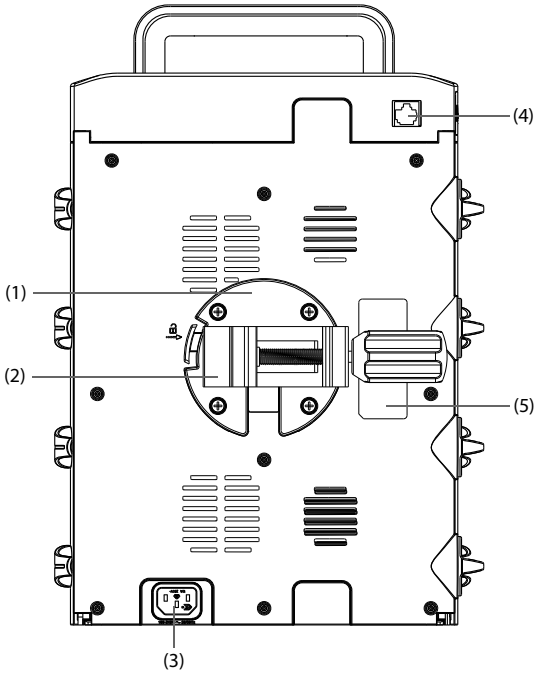

(1) Mounting bracket
Secures the pole clamp in place. Pressing the button on the left side of the bracket allows you to remove the pole clamp.

(2) Pole clamp
Secures the Dock to an approved IV pole. The pole clamp is adjustable to apply to IV poles of different dimensions.

(3) AC power input connector
Connects the AC power cord.

(4) Network connector (optional), a standard RJ45 connector
Connects the Dock to the CMS or other network equipments.

(5) Product label

2.5.4 Using the Pump Touchscreen

You can use the pump touchscreen to select a screen element by pressing directly on the pump's screen.

To avoid misuse, the touchscreen is locked automatically if no operation is detected in the preset time. To manually lock the touchscreen, swipe the touchscreen from top down, and select **Lock**.

To unlock the touchscreen, select on the pump touchscreen and swipe the slider as instructed.

WARNING

- **To prevent unauthorized personnel operating the pump and Dock, please ensure that the pump touchscreen is locked when the pump and Dock are not under the supervision of clinical professionals.**

NOTE

- **Wipe off any water on the touchscreen in case of rain or water spray.**
- **If the pump touch screen is abnormal during infusion, please do not use the touchscreen to operate the pump, and contact your service technician.**

2.5.5 Using the Pump On-Screen Keyboard

The pump on-screen keyboard enables you to enter the pump and Dock information:

- Enter the information by selecting one character after another.
- Select the Backspace key to delete single characters.
- Select the Caps Lock key to switch uppercase letters and lowercase letters.
- Select the Enter key to confirm the entry and close the on-screen keyboard.

3 Equipment Preparation

3.1 Equipment Preparation Safety Information

WARNING

- **Use only installation accessories specified by Mindray Scientific.**
- **The equipment software copyright is solely owned by Mindray Scientific. No organization or individual shall resort to modifying, copying, or exchanging it or to any other infringement on it in any form or by any means without due permission.**
- **Connect only approved devices to this equipment. Devices connected to the equipment must meet the requirements of the applicable IEC standards (e.g. IEC 60950 safety standards for information technology equipment and IEC 60601-1 safety standards for medical electrical equipment). The system configuration must meet the requirements of the IEC 60601-1 medical electrical systems standard. Any personnel who connect devices to the equipment's signal input/output port are responsible for providing evidence that the safety certification of the devices has been performed in accordance to the IEC 60601-1. If you have any questions, please contact Mindray Scientific.**
- **If it is not evident from the equipment specifications whether a particular combination with other devices is hazardous, for example, due to summation of leakage currents, please consult the manufacturer or an expert in the field. A determination must be made that the proposed combination will not negatively affect the devices themselves or the patient's safety.**
- **Ensure that the equipment is properly secured and positioned. Position change and severe shock can lead to changes to the delivery accuracy.**

CAUTION

- **The equipment should be installed by the authorized personnel.**
- **Before use, verify whether the packages are intact. In case of any damage, do not apply it to patient.**

NOTE

- **Save the packing case and packaging material as they can be used if the equipment must be reshipped.**

3.2 Environmental Requirements

The operating environment of the equipment must meet the requirements specified in this manual.

The environment where the equipment is used shall be reasonably free from noises, vibration, dust, corrosive, flammable and explosive substances. Moreover, to maintain good ventilation, the equipment shall be at least 2 inches (5cm) away from around the cabinet.

When the equipment is moved from one place to another, condensation may occur as a result of temperature or humidity differences. In this case, never start the system before the condensation evaporates.

CAUTION

- **Ensure that the equipment operating environment meets the specific requirements. Otherwise unexpected consequences, e.g. damage to the equipment, could result.**

3.3 Installation

NOTE

- **One pole clamp per shelf module must be used to ensure stability of the Dock.**
- **Remove the infusion bags and tubings from the IV poles or pumps, and pumps from shelf module before transporting the Dock. Carry each component separately. Failure to do so can result in system becoming unbalanced. Two or more people are required to carry the Dock configured with multiple shelf modules.**
- **According to IEC 60601-1, ensure that the carrying capacity of infusion support shall be four times more than the total weight of the Dock (including the controller, shelf module, and pumps). For example, if you are mounting a four-pump system with a total weight of 17.6 lbs (8 kg), the carrying capacity of the infusion support needs to be more than 70.5 lbs (32 kg).**

3.3.1 Securing a Pump in the Dock

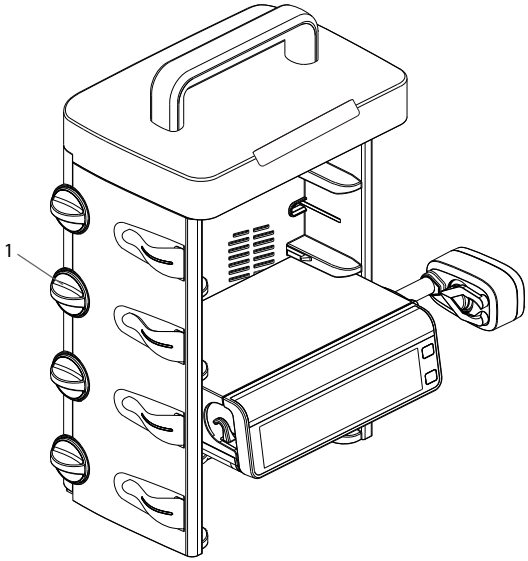

(1) Unlocking knob

Before securing a pump into the Dock, ensure that the following requirements are met:

- The unlocking knob on the shelf module is in the horizontal position for the selected pump bay.
- The pole clamp is removed from the pump.
- The power cord is disconnected from the pump.

To secure the pump in the Dock, firmly push the pump until you hear that the clip engages the pump bay.

To unlock and remove the pump, hold the pump you wish to remove, then turn the unlocking knob clockwise to the vertical position and slide the pump out of the bay.

NOTE

- **Cascade Docks support maximum 16 pumps.**
- **Only the BeneFusion n series and e series pumps can be secured in the Dock.**

3.3.2 Securing a Dock in the Medical Supply Unit

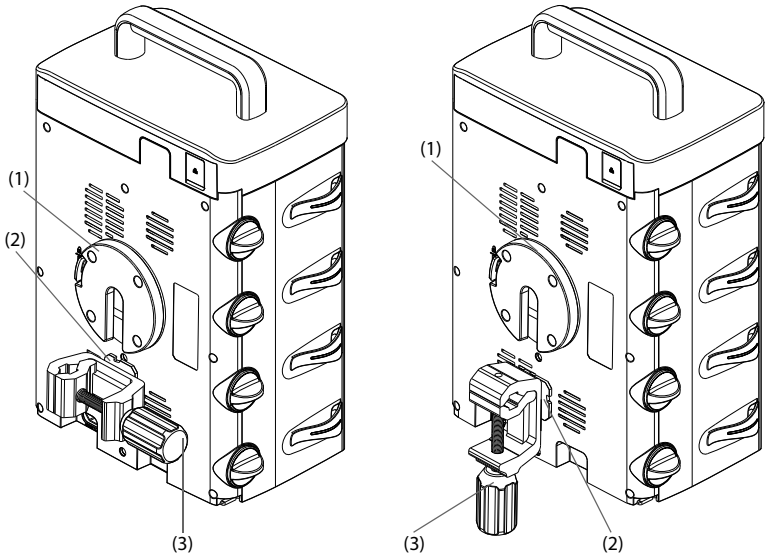

(1) Mounting bracket (2) Clip connector (3) Pole clamp handle

Connect the clip connector to the mounting bracket. Adjust the pole clamp handle to secure the IV pole.

NOTE

- **Please do not mount the Dock to an IV pole.**
- **Use one pole clamp for each shelf module to ensure that the Dock is properly secured on the IV pole of the medical supply unit.**

3.3.3 Securing a Dock in the Medical Trolley

The pole clamp secures the Dock in the medical trolley. For detailed information on how to install the pole clamp and medical trolley, see *The Pole Clamp and Medical Trolley Installation Guides*.

3.4 Setting Up the Equipment

Observance of this manual is a prerequisite for proper product performance and correct operation. It ensures patient and operator safety.

3.4.1 Connecting the AC Mains

The equipment is powered by AC power supply. Before connecting the equipment to the AC mains, check the followings:

- The voltage and frequency ratings of the power line are the same as those indicated besides the AC power input.
- The both sides of the power cord connectors are free of liquid or other residue.
- The inside and surroundings of the AC power input connector are free of liquid or other residues.

To connect the AC power source, follow this procedure:

1. Connect the female end of the power cord to the AC power input.
2. Connect the male end of the power cord to a wall AC outlet.
3. Check that the external power supply indicator is on.

The external power supply indicator lies at the right side of the alarm light. When the AC mains is not connected, the external power supply indicator is off. When AC mains is connected, the external power supply indicator is illuminated in green.

WARNING

- **Always use the accompanying power cord delivered with the equipment.**
- **Before connecting the equipment to the AC mains, check that the voltage and frequency ratings of the power line are the same as those indicated on the equipment.**
- **Do not touch the power connector with wet hand. Eliminate the liquid or any residue inside of or at the surroundings of the AC power input connector and power cord connectors.**

3.5 Setting Up the Dock

Before getting started, ensure that the pump and Dock are properly set up:

- The Dock is placed on a stable surface or properly mounted using the pole clamp, and the pump is secured in the Dock.
- The Dock is plugged in to a properly-grounded, AC power outlet. See ***3.4.1 Connecting the AC Mains***.

WARNING

- **Before putting the system into operation, the operator must verify that the equipment, connecting cables and accessories are in correct working order and operating condition.**
- **Only a shelf module containing maximum four pumps can be used on a flat surface. Larger shelf module configurations are more top heavy and have an increased risk of tipping, which could lead to patient or user injury.**

NOTE

- **Stay within 1 m of the Dock while setting it up and operating it, ensuring that you have a clear view of the alarm light and external power LED.**
- **The Dock use a mains plug as isolation means to the mains power. Do not locate the Dock in a place difficult to operate the mains plug.**

3.6 Turning on the Dock

The Dock is automatically turned on when the external AC power supply is connected. Check that the alarm light is on, this indicates that the visible alarm indicator functions correctly.

CAUTION

- **Check that the alarm light is on when the Dock is powered on. Do not use the Dock if the alarm light is off. Contact your service personnel or us.**

3.7 Turning off the Dock

To turn off the Dock, follow this procedure:

1. Ensure that infusion has been completed.
2. Disconnect the line from the patient, and disconnect the power supply to turn off the Dock.

4 Dock Setup

Setting the Dock enables you to customize the Dock to best meet your needs. Accessing the **Dock Setup** menu is password protected.

This chapter describes the settings and functions in the **Dock Setup** menu.

CAUTION

- **The Dock Setup can only be changed by authorized personnel. Contact your department manager or biomedical engineering department for the passwords used at your facility.**

NOTE

- **Dock Setup menu and Batch Config menu are available when the pump and Dock are in proper connection.**

4.1 Accessing the Dock Setup Menu

To access the **Dock Setup** menu, follow this procedure:

1. Swipe the pump touchscreen from top down → select **Menu** → select **Dock Setup** → input the required password → select ↵.
2. Select the desired tab.

4.2 The Network Setup Settings

4.2.1 The Network Type Settings

Menu Item	Default Setting	Function
Network Type	Auto	Selects what kind of network your equipment will use. **Auto**: the equipment automatically identify your network type.

4.2.2 The LAN IP Settings

Menu Item	Default Setting	Function
DHCP Switch	On	Selects whether inputting the **IP Address**, **Subnet Mask**, and **Gateway** is required.
IP Address	0.0.0.0	
Subnet Mask	0.0.0.0	
Gateway	0.0.0.0	
Auto-obtain DNS Switch	On	Selects whether inputting the IP address of **Preferred DNS Server** and **Alternate DNS Server** is required.
Preferred DNS Server	0.0.0.0	
Alternate DNS Server	0.0.0.0	
MAC Address	/	/

4.2.3 The WLAN Settings

Menu Item		Default Setting	Function
WLAN Setup	WLAN Band	Auto	**Auto**: automatically identifies the WLAN band.
	BGN Channel	All	Selects the type of B, G, and N channels.
	AN Channel	All	Selects the type of A and N channels.
SSID		/	/
Password		/	/
Security		WEP OFF	Selects the security method.

4.2.4 The Bedside Hotspot Settings

Menu Item		Default Setting	Function
WLAN Setup	WLAN Band	5GHz	If you want to connect the device to a monitor, the WLAN band set on the device must be the same with that of the monitor when the monitor serves as a hotspot.
	BGN Channel	All channels	Selects the type of B, G, and N channels.
	AN Channel	All channels	Selects the type of A and N channels.
Password		/	Views or changes the password of the shared hotspot. If you want to connect the device to a monitor, the shared hotspot password set on the device must be the same with that of the monitor.

4.2.5 The WLAN IP Settings

Menu Item	Default Setting	Function
DHCP Switch	On	Selects whether inputting the **IP Address**, **Subnet Mask**, and **Gateway** is required.
IP Address	0.0.0.0	
Subnet Mask	0.0.0.0	
Gateway	0.0.0.0	
Auto-obtain DNS Switch	On	Selects whether inputting the IP address of **Preferred DNS Server** and **Alternate DNS Server** is required.
Preferred DNS Server	0.0.0.0	
Alternate DNS Server	0.0.0.0	
MAC Address	/	/

4.2.6 The Central Station Setup Settings

Menu Item	Default Setting	Function
CMS Server Address	/	Inputs the IP addresses of the CMS you want to connect to.
Central Station IP Address	0.0.0.0	/

4.2.7 The Device Discover Settings

Multicast helps device discovery between the Dock and Dock, the Dock and CMS. Devices in the same multicast group can be mutually discovered.

Menu Item	Default Setting	Function
Multicast TTL	1	/
Multicast Address	225.0.0.8	
Master Server Address	/	
Master Server IP Address	0.0.0.0	
Connected Status	Disconnect	

4.2.8 The ADT Setup Settings

If the Dock is connected with the Admit-Discharge-Transfer (ADT) server through the eGateway. You can load patient information from ADT server to the Dock.

Menu Item	Default Setting	Function
Server Address	/	Inputs the host name or IP address of the ADT gateway.
IP Address	0.0.0.0	
Port	3502	Inputs the port of the ADT gateway.
ADT Query	Off	Selects whether patient information can be loaded to the Dock from the ADT server. If this switch is turned on, the pump loads patient information from the ADT server.

4.2.9 The Cert Manage Settings

Menu Item	Default Setting	Function
Local Cert Manage	/	**Delete**: deletes the selected certifications.

NOTE

- **The number of certifications to be imported and the local certifications cannot not exceed 20 in total.**

4.2.10 The HL7 Configuration Settings

You can send the realtime data, waveforms, and alarms from the Dock to the hospital servers via the HL7 protocol. This page also display the server connection status.

Menu Item		Default Setting	Function
Parameter HL7 Setup	Server Address	/	Inputs the name or IP address for the server receiving the realtime data and waveform.
	IP Address	0.0.0.0	
	Port	0	/
	Send Data	Off	
	Data Interval	1h	
	Connected Status	Disconnect	
Alarm HL7 Setup	Server Address	/	Inputs the name or IP address for the server receiving the alarm data.
	IP Address	0.0.0.0	
	Port	0	/
	Send Alarms	Off	
	Connected Status	Disconnect	
SSL Encrypt		Off	/

4.3 The Remote Control Settings

When pumps are connected to the Dock, you can set remote control for pumps through the **Dock Setup** menu. For details about remote control setttings, see the operator's manual of the corresponding pump.

4.4 The Device Management Settings

Menu Item	Default Setting	Function
Facility	/	Inputs the facility, the department location and the device name.
Department Location		
Device Name		
Device ID	/	Displays the device ID.

4.5 The Patient Information Settings

Menu Item	Default Setting	Function
Data Source	Dock	Selects the data source of patient information. • **Dock**: When the patient information of the Dock and pump is inconsistent, the patient information of the pump is synchronously updated as the Dock. • **Always Ask**: When the patient information of the Dock and pump is inconsistent, always ask whether to use patient information from the Dock or pump.
Patient ID	On	Selects whether the items can be displayed and edited in the **Patient Management** screen.
Visit Number	Off	
Patient Location	Fixed	• **Fixed**: After a patient is discharged, only patient data are removed, the Bed No. and Room No. are retained. • **Unfixed**: After a patient is discharged, patient data, Bed No., and Room No. are all removed from the pump.

4.6 Viewing the History Record

Menu Item	Default Setting	Function
History Record	/	Views the history record.

NOTE

- **A total loss of power has no impact on the history records stored.**
- **Alarms are saved as events and will remain if the equipment is powered down. The time of equipment power down is also recorded as an event.**
- **The Dock stores up to 2500 events. When the capacity is reached, earlier events will be overwritten by later ones.**

4.7 The Language Settings

Menu Item	Default Setting	Function
Language	/	Sets the language. **Note:**This setting is effective after the Dock has been restarted.

4.8 The Alarm Settings

Menu Item	Default Setting	Function
CMS/eGW Disconnected Alarm	Off	Sets whether the disconnection alarm will be triggered when the Dock is disconnected from the CMS or eGateway.

4.9 Viewing the Version Information

Menu Item	Default Setting	Function
Version Information	/	Displays Software Version, Internal Version, Power Software, etc.

4.10 The Batch Configuration Settings

4.10.1 Configuring Pumps through Batch Assign

To set the batch configuration, follow this procedure:

1. Swipe the pump touchscreen from top down → select **Menu** → select **User Maintenance** → input the required password → select ↵ → select **Batch Config**.
2. Set **Therapy Config in Batches**: select the desired options.
3. Set **System Config in Batches**: select the desired options.
4. Select **Batch Assign** → select **Yes** to assign the configurations to all pumps in the same Dock.

4.10.2 Configuring Pumps through the CMS

The CMS supports assigning configuration files of syringe pumps, infusion pumps and Docks to ensure consistent configuration across devices. When the pumps are inserted into the Dock and the Dock is connected to the CMS, you can configure pumps in batches through the Dock and the CMS. Contact the service personnel for detailed information.

4.11 Managing Dock Certifications

To manage the Dock certifications, follow this procedure:

1. Connect the USB drive with certifications to the USB connector of the pump.
2. Swipe the pump touchscreen from top down → select **Menu** → select **User Maintenance** → input the required password → select ↵.
3. Select **Dock Cert. Manage.**→ select **USB Cert Manage**→ select certifications you want to import from the USB memory→ select **Import** to import the desired certifications from the USB memory. Do not exit the **Dock Cert. Manage.** screen.
4. Connect the pump to the Dock.
5. In the **Dock Cert. Manage.** screen, set the desired options:
   - Select **View the Dock Cert. Cached in Pump**: view the Dock certifications cached in the pump.
   - Select **Synchronize Cached Cert. to Dock**: select the certifications to synchronously cached to the Dock → select **Synchronize** to import the certifications from the pump.
   - Select **Local Cert Manage**: view or delete local certifications.

5 Alarms

WARNING

- **A potential hazard can exist if different alarm presets and default settings are used for the same or similar equipment in the same care area, for example an intensive care unit or cardiac operating room.**
- **The equipment in your care area may each have different alarm settings to suit different patients. Always check that the alarm settings are appropriate for your patient before start infusing.**

If the pump is secured in the Dock, when an alarm occurs to the pump, the alarm indications rules of the Dock are as follows:

- The pump and the Dock present alarm light, and the alarm light of the Dock is consistent with that of the highest priority pump alarm.
- The alarm light of the Dock is cleared after all pumps alarms are cleared.

If the pump is secured in the Dock, when an alarm occurs to the pump, the alarm light of the Dock indicates as follows:

Alarm priority	Alarm lamp color	Alarm lamp flashing frequency
High priority alarm	Red	2.0±0.6Hz
Low priority alarm	Yellow	Not flashing

NOTE

- **The maximum alarm delay from the alarm status of the pump to the alarm signal (light) generated by the equipment does not exceed 5 sec.**
- **If the pumps are secured in the Dock, when an alarm occurs to the pump, the alarm sound comes from their respective pump.**

This page intentionally left blank.

6 Networked Communication (Optional)

NOTE

- **This chapter is only applicable to the Dock with network function. The user may skip the instructions in this chapter if the Dock does not support network function.**

The equipment can be connected to the BeneFusion nCS Infusion Supervision System (hereafter referred to as “nCS”), BeneVision Central Monitoring System (hereafter referred to as “CMS”), and the eGateway.

6.1 Network Safety Information

CAUTION

- **Wireless network designing, deploying, debugging, and maintenance should be executed by the service personnel or authorized technicians.**
- **Always set the wireless network according to local wireless regulations.**
- **Data communication for all network functions must be performed within a closed network or within a virtually isolated network provided by a hospital. The hospital is responsible for ensuring the security of the virtually isolated network.**
- **Keep network authentication information, for example password, safe, protecting the network from being accessed by unauthorized users.**
- **Do not connect non-medical devices to the network.**
- **If wireless network signal is poor, there may be a risk of nCS or CMS data loss.**
- **RF interference may result in wireless network disconnection.**
- **Disconnecting from the network may result in nCS or CMS data loss and function failure. Check the patient in case of network disconnection and solve the network problem as soon as possible.**
- **Ensure that the IP address setting is correct. Changing the network settings may result in network disconnection. Contact your service personnel if you have any problems on setting the IP address.**

6.2 Connecting the Equipment to the nCS / CMS

The equipment can be connected to the nCS or CMS through wired or wireless network. When connected to the nCS or CMS, the system provides the following functions:

- The equipment can transmit infusion information, alarm information, and equipment information (such as network) to the nCS or CMS.
- Patient information can be synchronized between the equipment and the nCS, or between the equipment and the CMS.
- Configuration files can be assigned from the CMS to the equipment.

For more information, see *BeneFusion nCS Infusion Supervision System and BeneVision Central Monitoring System Operator's Manuals*.

To connect the equipment to the nCS or CMS, follow this procedure:

1. Set the **IP Address**, **Subnet Mask**, and **Gateway**. For more information, see *4.2 The Network Setup Settings*.
2. Connect the equipment to the nCS or CMS through any of the following methods:
   - Admit the equipment on the nCS or CMS. Refer to the *BeneFusion nCS Infusion Supervision System and BeneVision Central Monitoring System Operator's Manuals* for details of admitting an equipment.
   - Pair the equipment on the CMS. Refer to the *BeneVision Central Monitoring System Operator's Manual* for details of pairing an equipment.
   - Set the **CMS Server Address** in the **Dock Setup** menu, and the equipment automatically search and connected to the corresponding *nCS or* CMS. For the setting of **CMS Server Address**, see *4.2.6 The Central Station Setup Settings*.

NOTE

- **The equipment can communicate with the nCS or CMS only when it is properly connected. If the network is interrupted, you are not able to view the infusion information through the nCS or CMS.**

6.3 Connecting the Equipment to the eGateway

You can connect the equipment to the eGateway to implement interaction between the equipment and the Hospital Information System (HIS) via the HL7 protocol. When connected to the eGateway, the system provides the following functions:

- The equipment can transmit infusion information and drug information to the eGateway.
- Patient information can be synchronized between the equipment and the eGateway.

- The prescription system assigns prescriptions to the Dock through the eGateway and master server. Then the Dock assigns prescriptions to the specified pumps.

This page intentionally left blank.

7 Maintenance

Regular maintenance is essential to ensure that the equipment functions properly. This chapter contains information on periodic testing and maintenance.

7.1 Maintenance Safety Information

WARNING

- **To avoid electric shock, stop using the equipment if you find the housing of the equipment has signs of broken. Contact the service personnel for help in that case.**
- **Failure on the part of the responsible individual hospital or institution using this equipment to implement a recommended maintenance schedule may cause undue equipment failure and possible health hazards.**
- **No modification of this equipment is allowed.**
- **This equipment contains no user serviceable parts.**
- **The safety checks or maintenance involving any disassembly of the equipment should be performed by professional service personnel. Otherwise, undue equipment failure and possible health hazards could result.**
- **The service personnel must be properly qualified and thoroughly familiar with the operation of the equipment.**

CAUTION

- **The equipment and accessories shall not be served or maintained while in use with a patient.**
- **If you discover a problem with the equipment, such as the product label falls off, contact your service personnel.**

NOTE

- **If needed, contact the manufacturer for circuit diagrams, component part lists, descriptions, calibration instructions, or other information concerning the repair of the equipment.**

7.2 Maintenance and Testing Schedule

Follow the maintenance and testing schedule or local regulations to perform testing and maintenance. Make sure to clean and disinfect the equipment before taking any tests and maintenance.

The following table lists the maintenance and testing schedule:

Test/Maintenance Item	Recommended Frequency
Safety Tests	
Electrical safety tests	• Once every three years, or if required. • When the power board is repaired or replaced. • When the main board is replaced. • When the equipment drops to the ground.
Other Tests	
Visual inspection	Every day, before first use.
Power-on test	Each time the equipment is powered on.

7.3 Testing Methods and Procedures

Except the regular check, including visual inspection and power-on test, all other test and maintenance tasks should be performed by the qualified service personnel only.

If your equipment needs a safety test and performance test, contact the service personnel.

7.3.1 Performing Visual Inspection

Visually inspect the equipment before it is first used every day. If you find any signs of damage, remove the equipment from use and contact the service personnel.

Verify that the equipment meets the following requirements:

- Environment and power supply specifications are met.
- The equipment housing is free from cracks or other damages.
- The power cord is not damaged and the insulation is in good condition.
- Connectors, plugs, and cables are not damaged and kinked.
- Power cord and cable are securely connected with the equipment.

7.3.2 Performing Power-on Test

The equipment automatically performs a selftest at startup. Check the following items for the power-on test:

- The equipment powers on properly.
- The alarm light works properly.

7.4 Disposing of the Equipment

The service life of this equipment is ten years. Dispose of the equipment when its service life is reached. Follow local regulations regarding the disposal of such product.

WARNING

- **For disposal of parts, batteries, packaging materials, and accessories, where not otherwise specified, follow local regulations regarding disposal of hospital waste.**

This page intentionally left blank.

8 Care and Cleaning

In this chapter we only describe cleaning and disinfection of the Dock, infusion supervision base, pole clamp, and medical trolley. For the cleaning and disinfection of other reusable accessories, refer to their instructions for use.

8.1 Care and Cleaning Safety Information

WARNING

- **Use only the approved cleaners, disinfectants and methods listed in this chapter to clean and disinfect your equipment and accessories. Warranty does not cover damage caused by unapproved substances or methods.**
- **Do not mix disinfecting solutions, as hazardous gases may result.**
- **We make no claims regarding the efficacy of the listed chemicals or methods as a means for controlling infection. For the method to control infection, consult your hospital's infection control officer or epidemiologist.**
- **Be sure to turn off the system and disconnect all power cables before cleaning the equipment.**
- **The responsible hospital or institution shall carry out all cleaning and disinfection procedures specified in this chapter.**

CAUTION

- **Turn off the equipment and remove the power cord from the equipment before cleaning and disinfecting.**
- **Never immerse any part of the equipment or accessories in liquids or allow liquid to enter the interior of the equipment or accessories.**
- **Any contact of cleaners or disinfectants with connectors or metal parts may cause corrosion.**
- **Do not pour or spray any liquid directly on the equipment or accessories or permit fluid to seep into connections or openings.**
- **If you spill liquid on the equipment or accessories, disconnect the power supply, dry the equipment, and contact your service personnel.**
- **Never use abrasive materials (such as steel wool or silver polish), or erosive cleaners (such as acetone or acetone-based cleaners).**

- **Dilute and use the cleaners or disinfectants according to the manufacturer's instructions.**
- **Check the equipment after cleaning and disinfecting. If there is any sign of damage, remove it from use.**

8.2 Cleaning the Dock and Infusion Supervision Base

Clean the equipment on a regular basis. Before cleaning, consult your hospital's regulations.

To clean the equipment, follow this procedure:

1. Dampen a soft lint-free cloth with water or ethanol (70%).
2. Wring excess liquid from the cloth.
3. Wipe the external surface of the equipment with the damp cloth, avoiding the connectors and metal parts.
4. Dry the surface with a clean cloth. Allow the equipment air dry in a ventilated and cool place.

CAUTION

- **Any contact of cleaners or disinfectants with connectors or metal parts may cause corrosion.**

8.3 Disinfecting the Dock and Infusion Supervision Base

Disinfect the equipment as required in your hospital's servicing schedule. Cleaning the equipment before disinfecting is recommended. Always dilute and use disinfectants according to the manufacturer's instructions. The following table lists approved disinfectants:

Product Name	Product Type	Manufacturer
Alpet® D2 Surface Sanitizing Wipes	Wipes	BEST SANITIZERS INC™.
CIDEX® OPA	Liquid	Gilag GmbH International Advanced Sterilization products
Clorox Dispatch® Hospital Cleaner Disinfectant Towels with Bleach	Wipes	Clorox professional products company

Product Name	Product Type	Manufacturer
Clorox Healthcare® Bleach Germicidal Wipes	Wipes	Clorox professional products company
Clorox Healthcare® Hydrogen Peroxide Cleaner Disinfectant Wipes	Wipes	Clorox professional products company
Diversey Oxivir® TB Wipes	Wipes	Diversey Inc
Metrex CaviCide1™	Liquid, spray	METERX® RESEARCH
Metrex CaviWipes™	Wipes	METERX® RESEARCH
PDI Sani-Cloth® AF3 Germicidal Disposable Wipe	Wipes	PDI Inc.
PDI Sani-Cloth® Bleach Germicidal Disposable Wipe	Wipes	PDI Inc.
PDI Sani-Cloth® HB Germicidal Disposable Wipe	Wipes	PDI Inc.
PDI Sani-Cloth® Plus Germicidal Disposable Cloth	Wipes	PDI Inc.
PDI Super Sani-Cloth® Germicidal Disposable Wipe	Wipes	PDI Inc.
VIRAGUARD® Hospital Surface Disinfectant Towelettle	Wipes	VERIDIEN corporation
Virex® II 256 (1:256)	Liquid	Diversey Inc
Virex® TB	Liquid, spray	Diversey Inc
JIAN ZHI SU Disinfectant Tablets	Tablet	Beijing ChangJiangMai Medical Science Technology Co. Ltd
JIAN ZHI SU Surface Disinfectant Spray	Liquid, spray	Beijing ChangJiangMai Medical Science Technology Co. Ltd
JIAN ZHI SU Disinfectant, Double-chain Quaternary Ammonium	Liquid	Beijing ChangJiangMai Medical Science Technology Co. Ltd
DIAN'ERKANG Surface Wipes	Wipes	Shanghai Likang Disinfectant Hi-Tech Co., Ltd

Product Name	Product Type	Manufacturer
DIAN'ERKANG Surface Disinfectant	Liquid	Shanghai Likang Disinfectant Hi-Tech Co., Ltd
DIAN'ERKANG Disinfectant Spray	Liquid, spray	Shanghai Likang Disinfectant Hi-Tech Co., Ltd
Clinell® Universal Wipes	Wipes	GAMA Healthcare Ltd
Clinell ® Sporicidal Wipes	Wipes	GAMA Healthcare Ltd
Tristel Duo™	Liquid, foam	Tristel solutions Limited
Tristel Jet	Liquid, spray	Tristel solutions Limited
Tristel Fuse For Surfaces, 196ppm	Liquid	Tristel solutions Limited
Surfanios Premium, 0.25%	Liquid	ANIOS LABORATORIES
Surfa 'safe	Liquid, spray	ANIOS LABORATORIES
Wip' Anios premium	Wipes	ANIOS LABORATORIES
Aniosurf ND premium, 0.25%	Liquid	ANIOS LABORATORIES
Mikrobac® Tissues	Wipes	BODE Chemie GmbH
Cleanisept® Wipes	Wipes	Dr. Schumacher GmbH
mikrozid® PAA Wipes	Wipes	Schülke & Mayr GmbH
mikrozid® Sensitive Wipes	Wipes	Schülke & Mayr GmbH
Ecolab Incidin® OxyWipes	Wipes	Ecolab Deutschland GmbH
Glutaraldehyde, 2%	Liquid	/
Ethanol, 70%	Liquid	/
Isopropanol, 70%	Liquid	/
Sodium hypochlorite bleach, 0.5%	Liquid	/

Product Name	Product Type	Manufacturer
Hydrogen peroxide, 3%	Liquid	/
Rely+On™ Virkon® High Level surface Disinfectant, 1%	Powder	Antec International Ltd
1-Propanol, 50%	Liquid	/
Descosept® forte	Liquid	Dr. Schumacher GmbH
Descosept® AF	Liquid	Dr. Schumacher GmbH
Dismozon® plus, 0.4%	Powder	BODE Chemie GmbH
mikrozid® AF Wipes	Wipes	Schülke & Mayr GmbH
Terralin® Liquid	Liquid	Schülke & Mayr GmbH
Perform® Classic Concentrate OXY, 0.5%	Powder	Schülke & Mayr GmbH

8.4 Cleaning the Pole Clamp and Medical Trolley

Clean the pole clamp and medical trolley on a regular basis. To clean the pole clamp and medical trolley, follow this procedure:

1. Clean the pole clamp and medical trolley with a soft cloth moistened with water or ethanol (70%).
2. Wipe off the cleaner residue with a dry cloth.
3. Allow the pole clamp and medical trolley to air dry.

8.5 Disinfecting the Pole Clamp and Medical Trolley

We recommend that the pole clamp and medical trolley should be disinfected only when necessary as determined by your hospital's policy.

Cleaning the accessories before disinfecting is recommended.

Product Name	Product Type	Manufacturer
Isopropanol, 70%	Liquid	/
Hydrogen peroxide, 3%	Liquid	/

Product Name	Product Type	Manufacturer
Perform® Classic Concentrate OXY, 0.5%	Powder	Schülke & Mayr GmbH
Dismozon® plus, 0.4%	Powder	BODE Chemie GmbH
Descosept® AF	Liquid	Dr. Schumacher GmbH
Descosept® forte	Liquid	Dr. Schumacher GmbH
mikrozid® AF Wipes	Wipes	Schülke & Mayr GmbH
Rely+On™ Virkon® High Level surface Disinfectant, 1%	Powder	Antec International Ltd
Terralin® Liquid	Liquid	Schülke & Mayr GmbH

CAUTION

- **To avoid long term damage, the accessories should be disinfected only when necessary as determined by your hospital's policy.**

8.6 Sterilization

Sterilization is not recommended for this equipment, related products, accessories, or supplies unless otherwise indicated in the Instructions for Use that accompany the products, accessories or supplies.

8.7 Impact of Improper Cleaning

Using cleaners other than those recommended may have the following impact:

- Product discoloration
- Metal part corrosion
- Brittle and breaking wires, connectors, and equipment housing
- Reduced cable and leadwire life
- Overall system performance degradation
- Equipment malfunction or failure

9 Accessories

The accessories listed in this chapter comply with the requirements of IEC 60601-1-2 when in use with the equipment. For details about the accessories, refer to the instructions for use provided with the accessory.

WARNING

- **Use accessories specified in this chapter. Using other accessories may cause damage to the equipment or not meet the claimed specifications.**
- **The accessories listed in this chapter must be used with the equipment. The operator shall read the manual of the equipment (including accessories) or contact us before use, to confirm whether the accessories match with the equipment. Otherwise, this may cause patient injury.**

CAUTION

- **The accessories may not meet the performance specifications if stored or used outside the specified temperature and humidity ranges. If accessory performance is degraded due to aging or environmental conditions, contact your service personnel.**
- **Check the accessories and their packages for any sign of damage. Do not use them if any damage is detected.**
- **Check the compatibility of the equipment, cables and accessories before use. Incompatible accessories may degrade the performance of the equipment or cause damage to the equipment.**
- **Use the accessories before the expiry date if their expiry date is indicated.**

NOTE

- **For accessory with a safe service life, see its package for the service life.**

PN	Description
0020-20-12522	Power cord, 10A, 250V, 2.5m, International
009-001075-00	Power cord, 250V, 10A, 3m, Brazil

PN	Description
009-001791-00	Power cord, 250V, 16A, 3m, South Africa
009-002636-00	Power cord, 10A, 1.5m, Australia standard
009-007190-00	Power cord, 3m, India
009-007191-00	Power cord, 1.8m, Switzerland
DA8K-10-14452	Power cord, USA
DA8K-10-14453	Power cord, UK
DA8K-10-14454	Power cord, Europe
045-004327-00	Pole clamp
045-004155-00	Medical trolley (for 4/8/12 pump bays)
045-004356-00	Medical trolley (for 6 pump bays)
115-074782-00	BeneFusion tDS Infusion Supervision Base
115-075505-00	eDS 4 extension pump bays upgrade package

A Product Specifications

A.1 Classifications

The equipment is classified, according to IEC60601-1:

Type of protection against electrical shock	CLASS I EQUIPMENT
Degree of protection against electrical shock	The pump: Defibrillation-proof type CF applied part (direct cardiac application)
Mode of operation	Continuous
Degree of protection against harmful ingress of water	IP33
Degree of safety of application in the presence of flammable anesthetic mixture with air or with oxygen or nitrous oxide	The equipment is not suitable for use in the presence of a flammable anesthetic mixture with air or with oxygen or nitrous oxide
Degree of mobility	Portable

A.2 Environmental Specifications

Item	Temperature (°C)	Relative humidity (noncondensing)	Barometric (kPa)
Operating conditions	5 to 40	15% to 95%	57.0 to 107.4
Storage conditions	–30 to 70	10% to 95%	16.0 to 107.4

Storage Conditions: Corrosive-free and ventilated

WARNING

- **The equipment may not meet the performance specifications if stored or used outside the specified temperature and humidity ranges. If the performance of the equipment is degraded due to aging or environmental conditions, contact your service personnel.**

A.3 Power Supply Specifications

A.3.1 External Power Supply Specifications

Item	External AC Power Supply
Voltage	100 VAC to 240 VAC
Current	8A to 3.4A
Frequency	50/60 Hz
Fuse	T2AL/AC 250V (1 controller)

A.4 Physical Specifications

Item	Maximum Weight (kg)	L × W × H (mm)
Dock (1 controller and 2 pump bays)	⩽ 2.5	⩽ 270 x 173 x 245
Dock (1 controller and 4 pump bays)	⩽ 3.4	⩽ 270 x 173 x 395
Dock (1 controller and 6 pump bays)	⩽ 5.0	⩽ 270 x 173 x 550
Extension 4 pump bays	⩽ 3.0	⩽ 270 x 173 x 335

A.5 Hardware Specifications

A.5.1 LEDs

Alarm lamp	1 (two color coded: yellow and red)
External power LED	1 (green)

A.5.2 Interface Specifications

Network connector	1 (Optional), standard RJ45 interface, supporting wired network 10/100Mbps, and complied with technical standard IEEE802.3. TCP/IP protocol Calibration protocol of TCP/IP The intended information flow is from the equipment to the server in the client site.

Power input connector	1

A.6 Wireless Network

Standards	IEEE 802.11a/b/g/n/ac
Modulation mode	BPSK,QPSK, QAM
Operating frequency	2412 MHz to 2472 MHz 5180 MHz to 5825 MHz
Data rate	IEEE 802.11a: 6 to 54 Mbps IEEE 802.11b: 1 to 11 Mbps IEEE 802.11g: 6 to 54 Mbps IEEE 802.11n: MCS0 to MCS7 IEEE 802.11ac: MCS0 to MCS8
Transfer power	< 20 dBm (CE requirement: detection mode – RMS) < 30 dBm (FCC requirement: detection mode – PEAK)
Operating mode	Transmitting data through the wireless access point (AP)
Data security	Standards: WPA/WPA2 PSK, WPA/WPA2 EAP, WPA/WPA2 CCKM EAP methods: LEAP, EAP-TTLS, EAP-TLS,EAP-FAST, PEAP-MsChapV2, PEAP-GTC,PEAP-TLS Encryption modes: TKIP and AES
System capacity	Number of the Docks supported by a single AP: ⩽ 16
Data transmission delay between the Dock and the CMS	Total data transmission delay time between the Dock and the CMS is ⩽ 8s
Interruption number and time between the Dock and the CMS	Total interruption duration ⩽ 0.01* total communication time (Test within 24 hours,16 Docks are roaming for 30 times)

A.7 Operating Environment

Host CPU	AM3358ZCZ
Primary programming language	C&C++

Operating system	Linux 3.2.0

B EMC and Radio Regulatory Compliance

B.1 EMC

The device meets the requirements of IEC 60601-1-2: 2020.

WARNING

- **The use of unapproved accessories may diminish device performance.**
- **Use of components, accessories, probes, and cables other than those specified may result in increased emission or decreased immunity of device.**
- **The device needs special precautions regarding EMC and needs to be installed and put into service according to the EMC information provided below.**
- **Use of this equipment adjacent to or stacked with other equipment should be avoided because it could result in improper operation. If such use is necessary, this equipment and the other equipment should be observed to verify that they are operating normally.**
- **Use of accessories, transducers and cables other than those specified or provided by the manufacturer of this equipment could result in increased electromagnetic emissions or decreased electromagnetic immunity of this equipment and result in improper operation.**
- **Portable RF communications equipment (including peripherals such as antenna cables and external antennas) should be used no closer than 30 cm (12 inches) to any part of the device, including cables specified by the manufacturer. Otherwise, degradation of the performance of this equipment could result.**
- **Other devices may interfere with this equipment even though they meet the requirements of CISPR.**
- **Use of portable or mobile communications devices can degrade the performance of the equipment.**
- **This equipment is not intended for use in residential environments and can possibly not provide adequate protection to radio reception in such environments.**

If the system is operated within the electromagnetic environment listed in Table EMC-2, Table EMC-3 and Table EMC-4, the system will remain safe and will provide the following basic performances:

- Operating mode
- Function
- ALARM CONDITIONS regarded
- Data stored

Table EMC-1

Guidance and Mindray Declaration - Electromagnetic Emissions		
The device is intended for use in the electromagnetic environment specified below. The customer or the user of device should assure that it is used in such an environment.		
Emission test	**Compliance**	**Electromagnetic environment - guidance**
RF Emissions CISPR 11	Group 1	The device uses RF energy only for its internal function. Therefore, its RF emissions are very low and are not likely to cause any interference in nearby electronic equipment.
RF Emissions CISPR 11	Class A	The device is suitable for use in all establishments other than domestic and those directly connected to the public low-voltage power supply network that supplies buildings used for domestic purposes.
Harmonic Emissions IEC 61000-3-2	Class A	
Voltage Fluctuations/ Flicker Emissions IEC 61000-3-3	Compliance	

Table EMC-2

Guidance and Mindray Declaration - Electromagnetic Immunity			
The device is intended for use in the electromagnetic environment specified below. The customer or the user of device should assure that it is used in such an environment.			
Immunity test	**IEC 60601 test level**	**Compliance level**	**Electromagnetic environment - guidance**
Electrostatic discharge (ESD) IEC 61000-4-2	±8 kV contact; ±2 kV, ±4 kV, ±8 kV, ±15 kV air	±8 kV contact; ±2 kV, ±4 kV, ±8 kV, ±15 kV air	Floors should be wood, concrete or ceramic tile. If floors are covered with synthetic material, the relative humidity should be at least 30%.
Electrical fast Transient / burst IEC 61000-4-4	±2 kV for power supply lines; ±1 kV for input/ output lines	±2 kV for power supply lines; ±1 kV for input/ output lines	Mains power quality should be that of a typical commercial or hospital environment.
Surge IEC 61000-4-5	±0,5 kV, ±1 kV line(s) to line(s); ±0,5 kV, ±1 kV, ±2 kV line(s) to earth	±0,5 kV, ±1 kV line(s) to line(s); ±0,5 kV, ±1 kV, ±2 kV line(s) to earth	
Voltage dips, Short interruptions and voltage variation on power supply input voltage IEC 61000-4-11	0 % U_T; 0,5 cycle At 0°, 45°, 90°, 135°, 180°, 225°, 270° and 315° 0 % U_T for 1 cycle and 70 % U_T for 25/ 30 cycles 0 % U_T for 250/300 cycle	0 % U_T; 0,5 cycle At 0°, 45°, 90°, 135°, 180°, 225°, 270° and 315° 0 % U_T for 1 cycle and 70 % U_T for 25/ 30 cycles 0 % U_T for 250/300 cycle	Mains power quality should be that of a typical commercial or hospital environment. If the user of our product requires continued operation during power mains interruptions, it is recommended that our product be powered from an uninterruptible power supply or a battery.
Power frequency (50/ 60 HZ) magnetic field IEC 61000-4-8	30 A/m	30 A/m	Power frequency magnetic fields should be at levels characteristic of a typical location in a typical commercial or hospital environment.
Note: U_T is the A.C. mains voltage prior to application of the test level.			

Table EMC-3

Guidance and Declaration - Electromagnetic Immunity			
The device is intended for use in the specified electromagnetic environment. The customer or the user of the device should assure that it is used in such an environment as described below.			
Immunity test	**IEC 60601 test level**	**Compliance level**	**Electromagnetic environment - guidance**
Conduced RF IEC 61000-4-6	3 Vrms 150 kHz to 80 MHz	3 Vrms 150 kHz to 80 MHz	Portable and mobile RF communications equipment should be used no closer to any part of the device, including cables, than the recommended separation distance calculated from the equation applicable to the frequency of the transmitter. Recommended separation distance: $d = 1.2\sqrt{P}$ $d = 2\sqrt{P}$ $d = 1.2\sqrt{P}$ 80 MHz to 800 MHz $d = 2.3\sqrt{P}$ 800 MHz to 2.7 GHz where P is the maximum output power rating of the transmitter in watts (W) according to the transmitter manufacturer and d is the recommended separation distance in meters (m). Field strengths from fixed RF transmitters, as determined by an electromagnetic site survey[b], should be less than the compliance level in each frequency range[c]. Interference may occur in the vicinity of equipment marked with the following symbol:
	6 Vrms in ISM bands[a] between 0,15 MHz and 80 MHz	6 Vrms in ISM bands[a] between 0,15 MHz and 80 MHz	
Radiated RF EM fields IEC61000-4-3	3 V/m 80 MHz to 2.7 GHz	3 V/m 80 MHz to 2.7 GHz	
Note 1: At 80 MHz and 800 MHz, the higher frequency range applies. Note 2: These guidelines may not apply in all situations. Electromagnetic propagation is affected by absorption and reflection from structures, objects and people.			

[a] The ISM (industrial, scientific, and medical) bands between 150 kHz and 80 MHz are 6.765 MHz to 6.795 MHz; 13.553 MHz to 13.567 MHz; 26.957 MHz to 27.283 MHz; and 40.66 MHz to 40.70 MHz. The amateur radio bands between 0,15 MHz and 80 MHz are 1,8 MHz to 2,0 MHz, 3,5 MHz to 4,0 MHz, 5,3 MHz to 5,4 MHz, 7 MHz to 7,3 MHz, 10,1 MHz to 10,15 MHz, 14 MHz to 14,2 MHz, 18,07 MHz to 18,17 MHz, 21,0 MHz to 21,4 MHz, 24,89 MHz to 24,99 MHz, 28,0 MHz to 29,7 MHz and 50,0 MHz to 54,0 MHz.

[b] Field strengths from fixed transmitters, such as base stations for radio (cellular/cordless) telephones and land mobile radios, amateur radio, AM and FM radio broadcast and TV broadcast cannot be predicted theoretically with accuracy. To assess the electromagnetic environment due to fixed RF transmitters, an electromagnetic site survey should be considered. If the measured field strength in the location in which the device is used exceeds the applicable RF compliance level above, the device should be observed to verify normal operation. If abnormal performance is observed, additional measures may be necessary, such as re-orienting or relocating the device.

[c] Over the frequency ranges 150 kHz to 80 MHz, field strengths should be less than 3V/m.

Table EMC-4

Guidance and Mindray Declaration - Electromagnetic Immunity			
The device is intended for use in the electromagnetic environment specified below. The customer or the user of device should assure that it is used in such an environment.			
Immunity test	**IEC 60601 test level**	**Compliance level**	**Electromagnetic environment - guidance**
Proximity magnetic fields IEC 61000-4-39	65 A/m 134,2 kHz Pulse modulation 2,1 kHz	65 A/m 134,2 kHz Pulse modulation 2,1 kHz	/
	7,5 A/m 13,56 MHz Pulse modulation 50 kHz	7,5 A/m 13,56 MHz Pulse modulation 50 kHz	

Table EMC-5 Test specifications and minimum distances

Recommended Separation Distances between Portable and Mobile RF Communications Equipment and the Device						
The device is intended for use in an electromagnetic environment in which radiated RF disturbances are controlled. The customer or the user of the device can help prevent electromagnetic interference by maintaining a minimum distance between portable and mobile RF communications equipment (transmitters) and the device as recommended below, according to the maximum output power of the communications equipment. Portable and mobile radio communications equipment (e.g. two-way radio, cellular/ cordless telephones and similar equipment) should be used no closer to any part of this device, including cables, than determined according to the following method:						
Test frequency (MHz)	**Band (MHz)**	**Service**	**Modulation**	**Maximum power (W)**	**Distance (m)**	**Immunity test level (V/m)**
385	380 - 390	TETRA 400	Pulse modulation 18Hz	1.8	0.3	27
450	430 - 470	GMRS 460 FRS 460	Pulse modulation 18Hz	2	0.3	28
710	704 - 787	LTE Band 13,17	Pulse modulation 217 Hz	0.2	0.3	9
745						
780						
810	800 - 960	GSM 800/ 900, tetra 800, iDEN 820, CDMA 850, LTE Band 5	Pulse modulation 18 Hz	2	0.3	28
870						
930						

1720	1700 - 1990	GSM 1800, CDMA 1900, GSM 1900, DECT, LTE Band 1, 3, 4, 25, UMTS	Pulse modulation 217 Hz	2	0.3	28
1845						
1970						
2450	2400 - 2570	Bluetooth, WLAN, 802.11 b/g/n, RFID 2450, LTE Band 7	Pulse modulation 217 Hz	2	0.3	28
5240	5100 - 5800	WLAN, 802.11 a/n	Pulse modulation 217 Hz	0.2	0.3	9
5500						
5785						

Table EMC-6

Recommended Separation Distances between Portable and Mobile RF Communications Equipment and the Device				
The device is intended for use in an electromagnetic environment in which radiated RF disturbance are controlled. The customer or the user of device can help prevent electromagnetic interference by maintaining a minimum distance between portable and mobile RF communication equipment (transmitters) and device as recommended below, according to the maximum output power of the communication equipment.				
Rated Maximum Output Power of Transmitter Watts (W)	**Separation Distance According to Frequency of Transmitter**			
	150 kHz to 80 MHz Out ISM bands $d = 1.2\sqrt{P}$	150 kHz to 80 MHz in ISM bands $d = 2\sqrt{P}$	80 MHz to 800 MHz $d = 1.2\sqrt{P}$	800 MHz to 2.7 GHz $d = 2.3\sqrt{P}$
0.01	0.12	0.2	0.12	0.23
0.1	0.38	0.64	0.38	0.73
1	1.2	2	1.2	2.3
10	3.8	6.4	3.8	7.3
100	12	20	12	23
For transmitters at a maximum output power not listed above, the recommended separation distanced in meters (m) can be determined using the equation applicable to the frequency of the transmitter, where P is the maximum output power rating of the transmitter in watts (W) according to the transmitter manufacturer. Note 1: At 80 MHz and 800 MHz, the higher frequency range applies. Note 2: These guidelines may not apply in all situations. Electromagnetic propagation is affected by absorption and reflection from structures, objects and people.				

Cable information:

PORT No.	Name	Cable Length (m)	Cable Shielded (Y/N)	Remark
1	Power cord	2.5	N	/

B.2 Radio Regulatory Compliance

Refer to *A.6 Wireless Network* for the details of RF parameters.

The radio device used in this product is in compliance with the essential requirements and other relevant provisions of Directive 2014/53/EU.

WARNING

- **Keep a distance of at least 20cm away from the equipment when Wi-Fi function is in use.**

This page intentionally left blank.

C Abbreviations

Abbreviation	In Full
AC	Alternating Current
Anti-Bolus	Anti-Bolus
BOLUS	Bolus
CCU(CICU)	Cardiac Intensive Care Unit
CE	Conformité Européenne
CISPR	International Special Committee on Radio Interference
CPU	Central Processing Unit
DC	Direct Current
DERS	Dose Error Reduction Systems
DPS	Dynamic Pressure System
EEC	European Economic Community
EMC	Electromagnetic Compatibility
EMI	Electromagnetic Interference
EtO	Ethylene oxide
ICU	Intensive Care Unit
ID	Identification
IEC	International Electrotechnical Commission

Abbreviation	In Full
IEEE	Institute of Electrical and Electronic Engineers
ISO	International Organization for Standardization
IV	Intravenous
KVO	Keep Vein Open
LED	Light Emitting Diode
Max	Maximum
MDD	Medical Device Directive
Min	Minimum
MRI	Magnetic Resonance Imaging
N/A	Not Applied
OR	Operating Room
SN	Series Number
USB	Universal Serial Bus
VTBI	Volume To Be Infused

D Declaration of Conformity

Declaration of Conformity-V1.0

Declaration of Conformity

Manufacturer:	Shenzhen Mindray Scientific Co., Ltd.
Address	6/F, Bldg 2, 1203 Nanhuan Avenue, Yutang Block, Guangming District, 518106 Shenzhen, P. R. China
EC-Representative:	Shanghai International Holding Corp. GmbH (Europe)
Address	Eiffestraße 80, 20537 Hamburg, Germany
Product:	Infusion Supervision System
Model:	BeneFusion nDS, BeneFusion nDS ex BeneFusion eDS, BeneFusion eDS ex

We herewith declare that the products above mentioned meet the provisions of the Council Directive 2014/53/EU concerning radio equipment. All supporting documentation is retained under the premises of the manufacturer.

Standards Applied:

☒ **EN 60601-1:2006+A1:2013+A2:2021**	☒ **EN 60601-1-2:2015/A1:2021**
☒ **EN IEC 62311:2020**	☒ **ETSI EN 301 489-1 V2.2.3**
☒ **301 489-17 V3.2.4**	☒ **ETSI EN 300 328 V2.2.2**
☒ **ETSI EN 301 893 V2.1.1**	☒ **EN IEC 62368-1:2020+A11:2020**

Place, Date of Issue:	Shenzhen,
Signature:	Bai Yanhong 2024.9.13
Name of Authorized Signatory:	Bai Yanhong
Position Held in Company:	Manager, Technical Regulation

This page intentionally left blank.

P/N: 046-029110-00(6.0)